SRL

Low Flow Vessels

ORDER GUIDE

SRL	25	1F	A	BC	SO	
	BAG SIZE	INLET/ OUTLET	CONSTRUCTION MATERIALS	CLOSURE	OPTIONS	SRL251FABCSO

The SRL Low Flow Vessel is versatile in it's ability to function as a strainer or add a filter bag and convert it to a liquid filtration housing unit. The SRL Series vessels come in two standard sizes, tailored to your throughput requirements. The SRL 1-25 is rated for 30 gpm, and the SRL 1-50 at 65 gpm. All sizes are available in three different closure designs for ease of cleaning/replacing and for easy removal without specific tools.

Unfiltered liquid enters the housing above the bag or basket and flows through. Because solids are contained inside the bag or basket, removal is made easy when service is required. Basket strainers and bag filters are selected to comply with specific application requirements.

SRL FEATURES	
Inlet/Outlet Orientation: Side-in Bottom-out	
Low Pressure Drop	Positive Cover Seal
Easily Cleaned	Heavy Duty Perforated Basket
Pipe Sizes from 0.5" to 2" NPT, RFF or quick disconnect	0.25" NPT Vent Tap
SRL OPTIONAL FEATURES	
Inlet/Outlet Orientation: Side-in Side-out	
Epoxy coating, electro-polish & fuse coating	
Higher pressure ratings available	
Compression devices	
Custom designs	
Sanitary construction	
Mesh-lined basket for straining applications: 50 micron & higher	
Band Clamp, Swing Bolt & Swing Away Closures available in both sizes	
ASME Code Stamp Available on swing bolt design	
FILTER STYLES ACCEPTED	
Install a bag filter of indicated size	Accepts ring collar only

PERFORMANCE CHARACTERISTICS - SINGLE CARTRIDGE

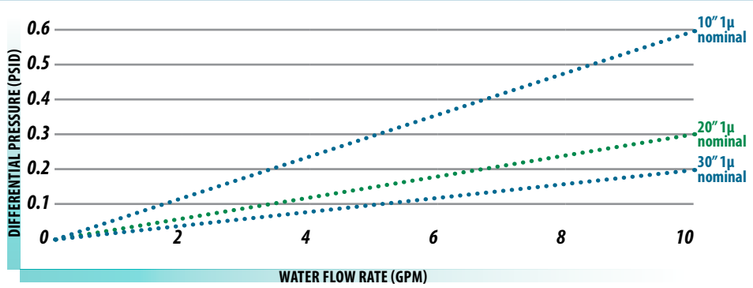

SRL 1-25 with Swing Bolt Closure design
(100 to 300 psi rating)

SRL-25-SB

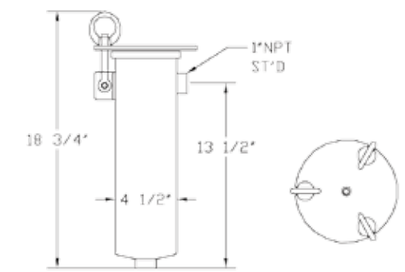

SRL-25-SW

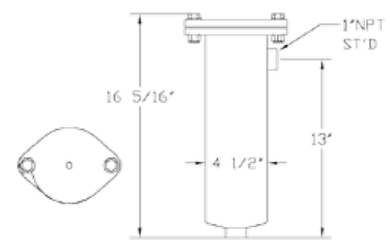

Swing Away Closure design
(100 psi rating)

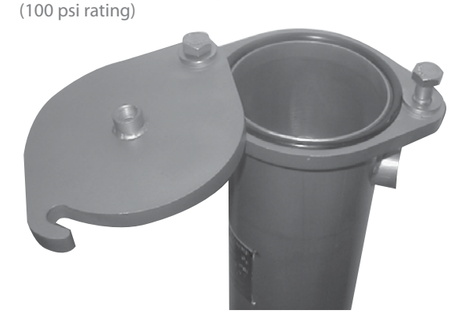

Band Clamp Closure design
(100 psi rating)

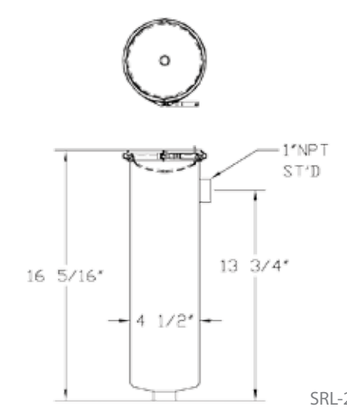

SRL-25-BC

ORDER OPTIONS

VESSEL	
SRL	Strainrite Low Flow Series
BAG SIZE	
3	#3 size bag*
4	#4 size bag*
25	#25 size bag*
50	#50 size bag*
	available in metal ring or Z-flange only
INLET/OUTLET	
1	1" NPT
1F	1" RFF
1TC	1" Triclover
1.5	1.5" NPT
1.5F	1.5" RFF
1.5TC	1.5" Triclover
2	2" NPT
2F	2" RFF
2TC	2" Triclover
MATERIAL	
A	Carbon Steel
B	304 Stainless Steel
C	316 Stainless Steel
CLOSURE	
BC	Band Clamp
SB	Swing Bolt
SW	Swing Away
OPTIONS	
SAN	Sanitary Design
SO	Side Outlet - Side Out/Same Side
EP	Electro Polish Finish
GT	Differential Pressure Gauge Ports
ML	Mesh-Lined Basket
UM	Code Stamped (SB only)

This is not a comprehensive list. We can build your vessel to suit your specifications. Call one of our customer service representatives for pricing and availability.